P/N: KD-CLN-LP200S-6MO

www.koolance.com

Specifications Sheet

Generated: 2026-11-21

LP Vinyl Record Ultrasonic Cleaner with Dryer (External Reservoir or Faucet) (Refurb)



This refurbished unit comes with a 6-month warranty.

KD-CLN-LP200S is a compact version of Klaudio's ultrasonic cleaner which draws water from an external reservoir. The included container should be filled with distilled water and located on the floor beneath the cleaner. Alternatively, this model supports a direct plumbing connection with Klaudio's tap water kit (sold separately), which is especially suited for high volume vinyl cleaning.

Enjoy your vinyl records as if they were new again! Klaudio's ultrasonic cleaners bring an unrivaled **200 Watts** of ultrasonic cleaning power to your LP collection. Using patent-pending technology, the toughest grime and dust is easily removed without the risk of physical scrubbers or need for detergent. Drying is also handled safely with blowers. Simply connect an external water source and insert your phonograph record-- the rest is automated.

Ultrasonic transducers are placed perpendicular to both sides of the disc for maximum cleaning effect. Klaudio's technology allows powerful waves to remove debris without damaging the disc, and special dampening minimizes vibration and noise. The entire washing and drying process can be adjusted from 3 to 9 minutes. Cleaning status is conveniently displayed through an LED progress bar. (See this page for before and after microscope images of an LP record disc!)

Features:

- 200W total ultrasonic cleaning power
- Compatible with 296-304mm (11.65-12in) diameter LP vinyl phonograph records; 7in and 10in with separate adapters
- 115V (60Hz) and 230V (50Hz) AC compatible
- Auxiliary power output for accessories
- Hands-free automated process which starts as soon as the record is inserted
- Risk-free cleaning and drying without physical surface contact
- No scrubbing or drying rollers to replace
- Designed for use without detergent, use only distilled water (or tap water with optional kit)
- Adjustable washing time: 0-5 minutes
- Adjustable drying time: 0-5 minutes
- Wash+dry, wash-only, and dry-only modes
- Noise: 65dBA (washing), 75dBA (drying)

NOTE: For vinyl discs only. Not recommended for cleaning shellac.

General	
Weight	31.80 lb (14.42 kg)
LP Cleaners	
Water Source	External reservoir or direct tap water connection

File

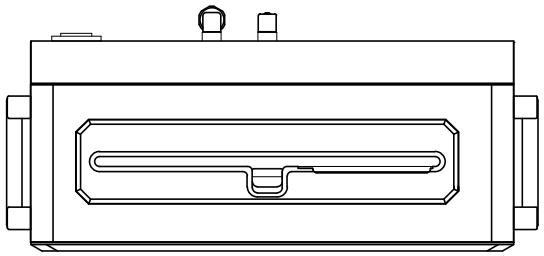

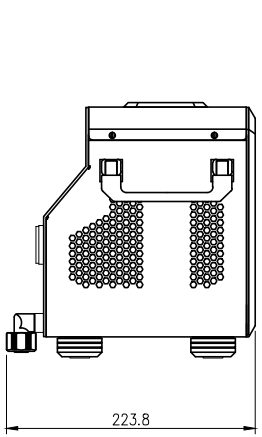

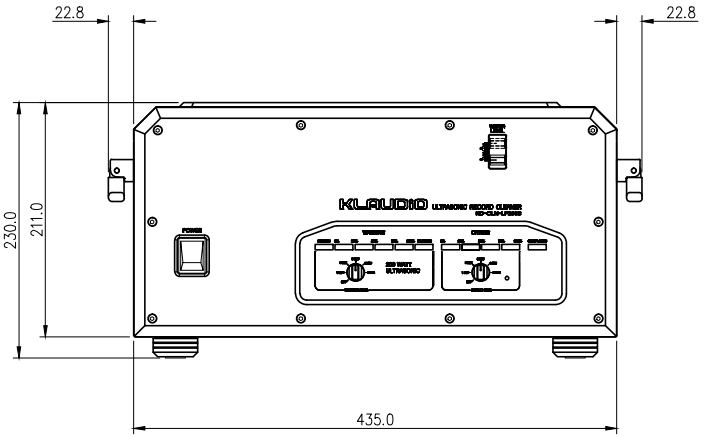

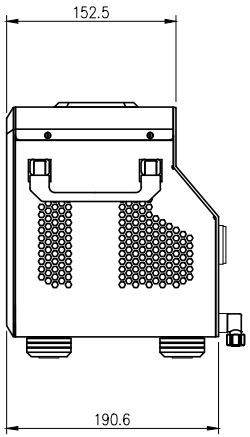

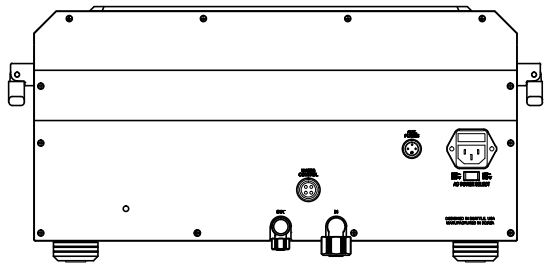

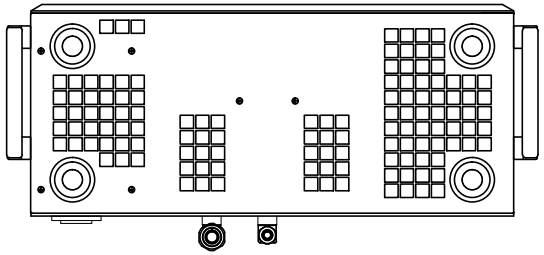

REV	DATE	CONTENTS	REVD BY	CHKD BY	APPD BY

REVISION

NO.	DESCRIPTION	MATER'L	QUANTITY	REMARKS
KLAUDIO™		UNIT MM	ITEM KD-CLN-LP200S	
		SCALE N/S	TITLE Dimension	
	BY BY BY APPRD BY	DECIMAL PLACES 0 : ±5.0 0.X : ±2.0 0.XX : ±1.0	DWG. NO.	PAGE
DATE		CODE NO.		
	S.J.LEE			